A Low-Power Analog Front-End for Photoplethysmography Signals with Dynamic Range Enhancement

Raul P. de Oliveira, Gabriel S. Ogawa, Victor M. Lima, Paulo C. C. de Aguirre and Alessandro G. Girardi
Computer Architecture and Microelectronics Group - GAMA
Federal University of Pampa - UNIPAMPA - Alegrete, Brazil

***Abstract*—This paper presents the design of an integrated low-power analog front-end (AFE) for photoplethysmography (PPG) signal acquisition with offset compensation based on dynamic range enhancement (DRE) technique, which can be used in wearable devices such as smartwatches, smart rings and other low-power systems. The PPG circuit can be divided in two parts: receiver and transmitter. The proposed receiver is implemented with a transimpedance amplifier (TIA) and a current-steering DAC (IDAC) controlled by a DRE circuit to compensate the current offset at the input node, followed by a low-pass filter designed using the gm-C topology, a programmable gain amplifier (PGA), and an output buffer. The DRE technique is also employed in the PGA circuit to control the saturation at the output node. On the transmitter side, an LED is used to emit light, controlled by a driver. The AFE was developed in 65 nm CMOS process with a supply voltage of 1.2 V. The IDAC can compensate up to 7 μA DC offset of the input current signal supplied by a photodiode. The system has an output voltage swing of about 700 mV_{PP} with a DC voltage level of 600 mV and a low cut-off frequency of 724.53 Hz. The maximum power dissipation is 18.15 μW and the total silicon area is 363.65 $\times$ 352.25 μm^2.**

***Keywords*—AFE PPG, ultra-low power, DRE, wearable devices, offset compensation.**

I. Introduction

Photoplethysmography (PPG) circuit can be embedded in wearable devices such as smartwatches, smart rings, and others. It uses an analog front-end (AFE) circuit to measure the amount of light emitted by an LED and reflected by the human body to monitor blood oxygen levels and heartbeat. The PPG is correlated to a photodiode current used as reciever. The circuit can be divided in two parts: receiver and transmitter. The focus of this paper is to describe the design, simulation, and layout of an AFE for a PPG transceiver.

The proposed PPG transceiver system is shown in Fig. 1. It consists of a transmitter circuit (TX) that drives an LED, and a receiver (RX) AFE. The receiver includes a transimpedance amplifier (TIA) at the input node of the circuit, which is responsible for converting the current signal generated by a photodiode into a voltage. A current-steering digital-to-analog converter (IDAC) controls the offset caused by the ambient light [1]. The circuit is complete with a low-pass filter (LPF) with a cut-off frequency of about 700 Hz, a programmable gain amplifier (PGA) to amplify the signal and an output buffer [2].

IDAC and PGA are controlled by a DRE (dynamic range enhancement) control module. The IDAC current is selected

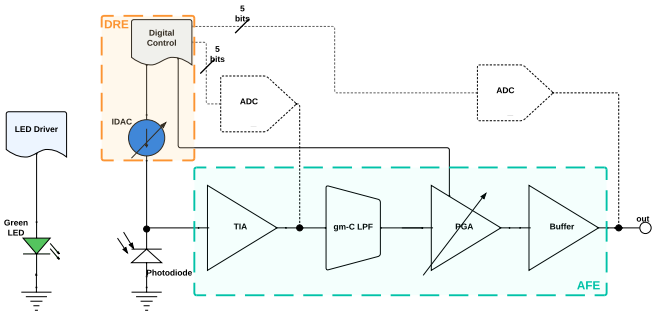

Fig. 1: Proposed PPG transceiver system.

according to the TIA output signal, i.e. if the signal after TIA is saturated due to the DC shift caused by the ambient light at the input node, the DRE circuit can increase the input current DC level, reducing the current at the input of the TIA. The PGA gain control is similar to the current offset control performed by the DRE circuit. The automatic gain control guarantees a full-scale signal at the analog-to-digital (ADC) input. The digital output of the ADC is read by the DRE system and the control is given by a 5-bit word. On this basis, the PGA gain can be set to the maximum value that does not saturate the signal, thereby increasing the ADC resolution. The design of the ADCs are out of the scope of this work and behavioral models were used to emulate these circuits during simulations.

In addition to the receiver PPG circuit, an LED driver was developed in the TX side to minimize power consumption. The strategy is to turn on the LED only when the receiver circuit operates.

The circuit is designed for a green LED as a wavelength reference and the offset current compensation is implemented based on the SFH 2202 photodiode. This photodiode has a maximum photocurrent at the wavelength of 4.1 μA [3]. Also, the IDAC guarantees a DC current level compensation until 7 μA, i.e., the maximum photocurrent on the input node that can be compensated is 11.1 μA. The devices that compose the circuits are sized using the gm/I_D methodology, and post-layout results were verified using Cadence tools. Low power consumption is an important requirement of the PPG system, since its application is for a wearable device operating with a small battery.

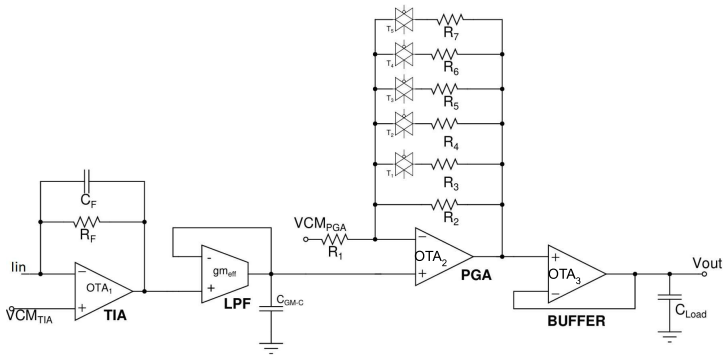

Fig. 2: Proposed AFE used in the RX part of the PPG system.

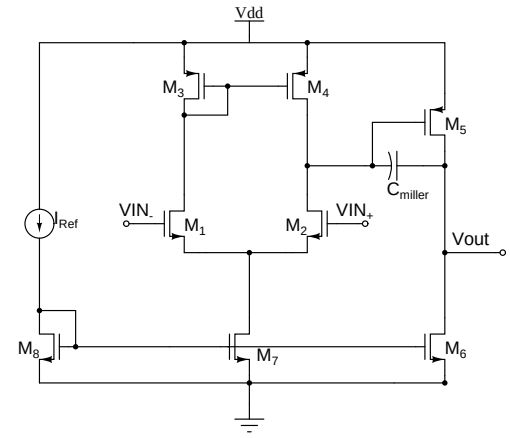

Fig. 3: Schematic of the two-stage Miller OTA used in the TIA and the PGA.

II. Proposed RX AFE

Fig. 2 shows the schematic of the implemented AFE, which represents the RX part of the PPG system. It is composed of a TIA with a feedback capacitor to set the operating frequency, a gm-C low-pass filter, a PGA to set the signal gain and ADC input voltage swing, and an output buffer that supplies the required current to the load capacitor (C_{LOAD}), which is estimated to be 1 pF. The following subsections detail the implementation of these blocks.

A. Transimpedance amplifier

The input signal in a PPG system is in the form of a current, so the first circuit of the AFE system should be a transimpedance amplifier (TIA) that converts the input current into an output voltage. It comprises an operational transconductance amplifier (OTA_1), a feedback resistor R_F and a feedback capacitor C_F. The low-frequency gain (A_{TIA}) is given by:

$$A_{TIA} = -\frac{A_{OTA_1} \cdot R_F}{1 + A_{OTA_1}} \approx -R_F, \tag{1}$$

where A_{OTA_1} is the open loop gain of OTA_1.

The bandwidth of TIA is determined by C_F. Due to the low operating frequency of the system, the capacitance can be very small to avoid increasing the chip area. Assuming C_F equal to 200 fF. From eq. (1), it can be seen that the gain is approximately equal to R_F. To ensure the specifications for this design, R_F is defined as 10 kΩ. The input common-mode voltage VCM_{TIA} is 617 mV.

The implementation of OTA_1 was performed using a two-stage Miller OTA, whose schematic is shown in Fig. 3 [4]. The first stage is composed of an NMOS differential pair (M_1 and M_2) and an active load (M_3 and M_4) that provides high gain, and the second stage (M_5 and M_6) is a common-source amplifier to maximize the output swing. The Miller capacitor implements a pole splitting for frequency compensation.

All transistors are biased in the saturation region. The reference current (I_{REF}) is defined as 200 nA. Based on these specifications, the DC operating points and gate dimensions of the transistors were defined using the g_m/I_D methodology. The results are shown in Table I. The compensation capacitance C_{miller} is 200 fF.

The designed OTA reached a low-frequency voltage gain of 57.11 dB, GBW = 616.193 kHz, and a common-mode rejection ratio (CMRR) with a mean of around 60 dB (Monte Carlo simulation with 500 runs).

B. Low-pass filter

In integrated circuits, traditional passive resistor-inductor-capacitor (RLC) or resistor-capacitor (RC) filter topologies are generally avoided due to their reliance on large-size components when the cutoff frequency is low. Alternatively, active gm-C filters can be employed for this bandwidth. The problem is that the gm value must be small to avoid large capacitances, which require the implementation of large transistors.

An alternative circuit is presented in Fig. 4 for generating the necessary gm for the filter. It features a cross-coupled differential pair, with transistors M_1, M_2, M_3, and M_4 forming the input stage. All these transistors have the same dimensions and are biased to operate in weak inversion. The two differential pairs are biased with tail currents I_{ss1} and I_{ss2} so that the difference between them is small.

The effective transconductance gm_{eff} is given by eq. 2, where η is the slope factor, I_{ss1} and I_{ss2} are the tail currents and V_T is the threshold voltage of input pair transistors.

$$gm_{eff} = \frac{I_{ss1}}{2 \cdot \eta \cdot V_T} - \frac{I_{ss2}}{2 \cdot \eta \cdot V_T} = \frac{\Delta i}{2 \cdot \eta \cdot V_T} \tag{2}$$

TABLE I: DC operation points and channel dimensions for the transistors of the Miller-OTA used in the TIA (Fig. 3).

	g_m/I_D (V^{-1})	V_{GS} (mV)	L (μm)	W (μm)
M_1 and M_2	20	317	1	3.54
M_3 and M_4	15	386	1	2.30
M_5	20	317	1	7.16
M_6	20	379	1	2.58
M_7	20	311	1	3.57
M_8	20	298	1	3.94

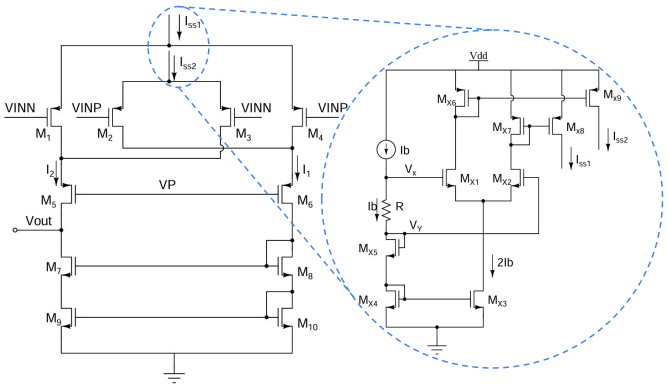

Fig. 4: Implemented gm-C cell and tail current mirror.

The difference between the tail currents, I_{ss1} and I_{ss2}, Δi, can be expressed in terms of transcontudence $gm_{X1,2}$ and the voltage drop across the resistor R, according to eq. 3, where k is the ration between transistors $M_{\text{x}8}$ and $M_{\text{x}9}$.

$$\Delta i = I_{ss1} - I_{ss2} = k \cdot gm_{X1,2}(V_X - V_Y) \tag{3}$$

The voltage drop in resistor R generates the potential difference $V_{XY} = Ib \cdot R$. With this configuration, the effective transconductance gm_{eff} can be expressed as [5]:

$$gm_{eff} = \frac{k \cdot gm_{X1,2} I_b R}{2 \cdot \eta \cdot V_T}. \tag{4}$$

It is possible to verify that the transconductor can be tuned by the resistance R. The cutoff frequency of the filter is given by:

$$f_c = \frac{gm_{eff}}{2\pi C_1}. \tag{5}$$

The LPF design aims to obtain a cutoff frequency of approximately 700 Hz. We choose a capacitor of 70 pF to maintain a tradeoff between filter silicon area and efficiency. So, the transconductor must have an effective transductance of approximately 200 nS. The reference current Ib was defined as 10 nA.

The gm-C cell and the tunable current mirror shown in Fig. 4 were designed using the gm/I_D methodology. The channel length of all transistors is 10 μm and channel widths W are given by: W_{M1-M4} = 8.73 μm; W_{M5-M6} = 1.6 μm; W_{M7-M10} = 1 μm; $W_{Mx1-Mx5}$ = 6.63 μm and $W_{Mx7-Mx10}$ = 16.45 μm.

The simulated frequency response for the designed LPF is shown in Fig. 5. The resulting cut-off frequency is f_c = 724.4 Hz for a tunable resistor R = 5.43 MΩ.

C. Programmable gain amplifier (PGA)

The PGA has the function to guarantee the signal excursion required for the input of the ADC (rail-to-rail) [6]. It is composed of OTA_2, resistors R_2 to R_7 and switches, as shown in Fig. 2. The same OTA used in the TIA is applied for the PGA.

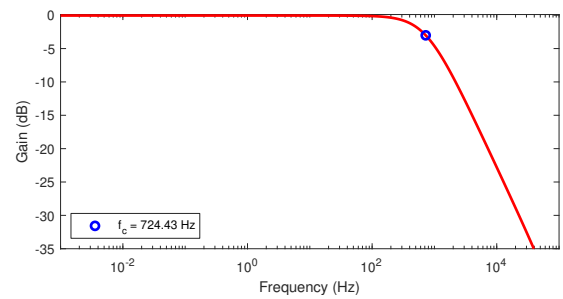

Fig. 5: Frequency response of the designed gm-C LPF.

To reach the variable gain, a combination of five resistors determine the feedback, with values defined as: R_1 = 0.125 MΩ, R_2 = R_3 = 1 MΩ, R_4 = 2.5 MΩ, R_5 = 2 MΩ, R_6 = 1.5 MΩ and R_7 = 1 MΩ.

The switches are implemented with transmission gates with short channel length of 60 nm to present low on resistance. Channel widths are 625 nm and 200 nm for PMOS and NMOS, respectively. The resulting on resistance is 14.02 kΩ for a V_{VDS}=600 mV.

The common mode voltage for the PGA is VCM_{PGA} = 552 mV. Stability measurements guarantee a phase margin with all switches off equal to 95.07° and for all switches on 78.46°. The PGA reaches a maximum voltage gain of 21.48 dB and a minimum of 17.58 dB.

D. Output buffer

The RX AFE PPG requires a buffer to isolate the filter stages, PGA stages, and the ADC input from the rest of the circuit. For this, a two-stage OTA is adopted employing a cascode current source, as shown in fig 6. This amplifier is adopted because it has high gain and low output impedance, and also because a cascode current mirror can increase the output impedance for the current sink and increase the CMRR.

The OTA_3 was designed for a reference current I_{ref} = 1 μA. Table II shows the DC operating points and the channel dimensions for the designed amplifier.

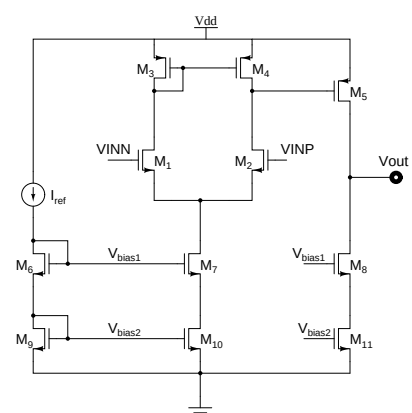

Fig. 6: Cascode current mirror two-stage OTA.

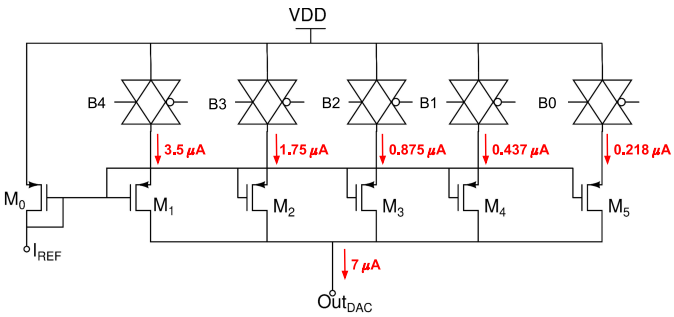

Fig. 7: Current-steering DAC.

The implemented cascode current mirror OTA reaches a low-frequency gain of 78.17 dB.

E. Current-steering DAC

The current-steering digital-to-analog converter (IDAC) used in the PPG has 5 bits [7]. Fig. 7 illustrates the IDAC and the combination of all the transmission gates used for a maximum current of 7 μA and a minimum of 0.218 μA. The control word has B4 as the most significant bit (MSB) and B0 as the least significant bit (LSB).

Table III presents the channel dimensions and DC operation points of IDAC transistors. The reference current I_{REF} was set to 0.218 μA.

III. LED Driver and Dynamic Range Enhancement (DRE)

There are two digital control modules in the PPG AFE, both of which are implemented in SystemVerilog: the LED driver in the TX circuit and the DRE in the RX part. The LED driver is responsible for switching the green LED on and off. At the same time, the DRE is responsible for keeping the DC input level at about 4 μA (Fig. 7) to achieve the maximum gain without signal saturation at the ADC input.

The ModelSim simulator was used to realize the testbench and verification for both systems.

TABLE II: DC operation points for two-stage OTA used in the buffer (Fig. 6).

Transistor	V_{GS} (V)	V_{DS} (V)	I_D (A)	gm/I_D (V^{-1})
M1, M2	0.329	0.3	5.00E-07	20.61
M3, M4	0.529	0.5	5.00E-07	6.51
M5, M10, M11	0.512	0.6	1.00E-06	7.33
M6, M8	0.352	0.6	1.00E-06	18.51
M7, M9	0.312	0.4	1.00E-06	18.51

TABLE III: DC operation points and channel dimensions of IDAC transistors (Fig. 7).

	g_m/I_D (V^{-1})	V_{GS} (mV)	L (μm)	W (μm)
M_1 - M_5	20	287	1	1.15
M_0	20	600	1	1.18

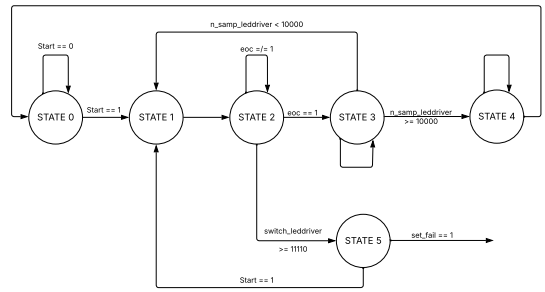

Fig. 8: State machine of the LED driver.

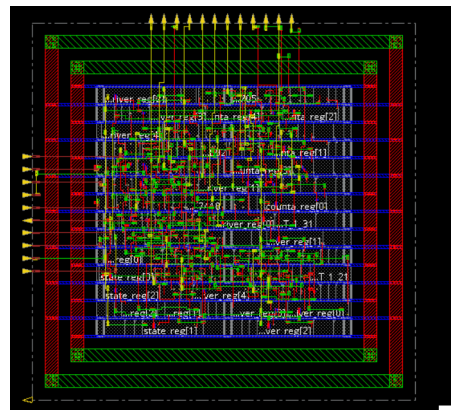

Fig. 9: Layout of the LED driver.

The LED driver is the block that consumes the most power in the PPG system, as it has to use high currents to supply the LED [8]. Therefore, the time during which the LED is switched on must be kept as short as possible. Fig. 8 presents the state machine of the implemented LED driver. The description of each state is shown in Table IV.

The physical synthesis was implemented with Innovus tool from Cadence Design Systems and the layout is shown in Fig. 9.

The DRE control module is characterized by the fact that it is a cascade of two state machines, as shown in Fig. 10. The first state machine is responsible for determining the IDAC current by controlling the 5 switches with 5 bits. The combination of closed switches is specified according to the ADC output. A total of 16 samples are acquired and evaluated. If all these samples are close to the maximum or minimum

TABLE IV: Description of states in the LED driver state machine of Fig. 8.

State	Description
0	Initial state.
1	Transition to state 2.
2	Checks if the ADC has already converged and closes the next switch in case the ADC is saturated.
3	Checks if reached the maximum number of samples.
4	State that shows that the ADC is not saturated.
5	Failure: all switches are closed, and the ADC remains saturated.

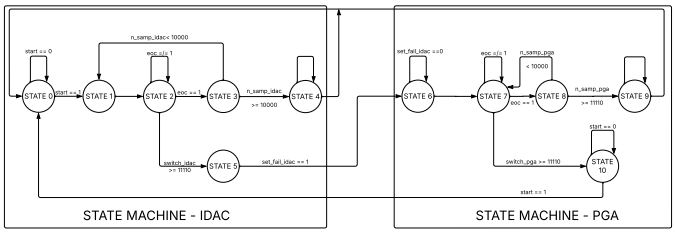

Fig. 10: State Machine of the DRE.

values, the system can be considered in saturation. In this case, the IDAC current is increased to reduce the photodiode bias current at the TIA input. If the IDAC state machine fails, the ADC output is still saturated even at maximum IDAC current, a failure flag is raised. It then triggers the second state machine, which controls the PGA gain by selecting the feedback resistance by means of five switches (T_1 to T_5 in Fig. 2). The DRE state machine consists of eleven states, which are presented in Table V.

The combination of the two control methods improves the detection of saturation during PPG signal acquisition while increasing the dynamic range of the system [9] [10]. The layout of the DRE control module after physical synthesis is shown in Fig. 11.

IV. Simulation Results and Layout

The physical design (layout) of this circuit is shown in Fig. 12 and required a total silicon area of 363.65 $\times$ 352.25 μm^2. The horizontal symmetry axis was chosen on the top level. For each block, we implemented the cross-pair strategy for transistor matching. The resistors were implemented in a polysilicon layer, and two additional capacitors were used to decouple VDD and GND.

It is possible to evaluate the electrical behavior of the designed system by emulating a PPG signal at the input. Post-layout electrical simulations were executed, including corner process variation. The input current was set to a DC level of 4 μA with a 3 μA of current swing and frequency of 1.5 Hz.

TABLE V: Description of states in the DRE state machine of Fig. 10.

State	Description
0	Initial state.
1	Transition state.
2	Checks if the ADC ended the conversion and in case it is saturated, closes next switch.
3	Checks if the acquired samples are equal.
4	The ADC is not saturated after the switches are closed.
5	Failure state for the IDAC: raises a flag of fail and starts the PGA state machine.
6	Start of the PGA state machine and state of transition.
7	Checks if the ADC ended its conversion and closes next switch in case the ADC is saturated.
8	Checks if all acquired samples are equal (same value for all ADC samples).
9	The ADC is not saturated.
10	Failure for the PGA: remains in this state until a bit of start is set again.

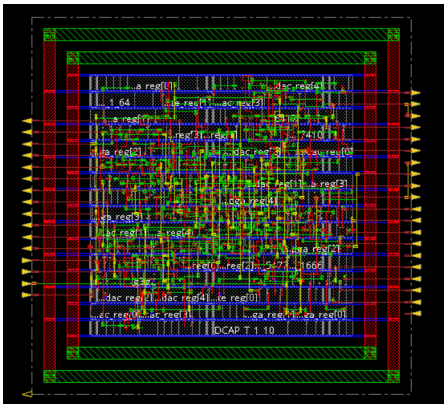

Fig. 11: Layout of the DRE control module.

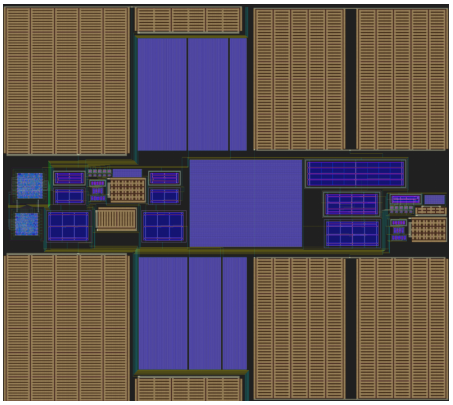

Fig. 12: Complete layout of the developed AFE PPG system.

The simulated curves are shown in Fig. 13, representing the typical-typical, slow-fast, fast-slow, slow-slow, and fast-fast variations. The DC level shift is provided from the variation of common-mode voltage at each different corner process shift. The system has an output voltage swing of about 700 mV$_{PP}$ with a DC voltage level of 600 mV and a low cut-off frequency of 724.53 Hz. The simulated power dissipation of the AFE PPG system is between 10.36 μW and 17.96 μW (not considering the LED power consumption). This range is given by the necessity of offset compensation, i.e., if the system does not need offset correction, the circuit consumes the minimum power, otherwise, the circuit dissipates the maximum power. Around 44.72 % of total power consumption is given by the IDAC block ($\approx$ 7.6 μA). Digital control blocks have a total power consumption of 195.53 nW. So, the maximum power consumption for in the designed PPG AFE is 18.15 μW.

Table VI shows a performance comparison between the designed PPG and other works in the literature. It is possible to notice the better power consumption of this work compared to others, except for [11], which has a smaller supply voltage. The 7 μA of ambient light cancellation (ALE) is adopted to decrease the total power consumption based on the wavelength current of the base photodiode.

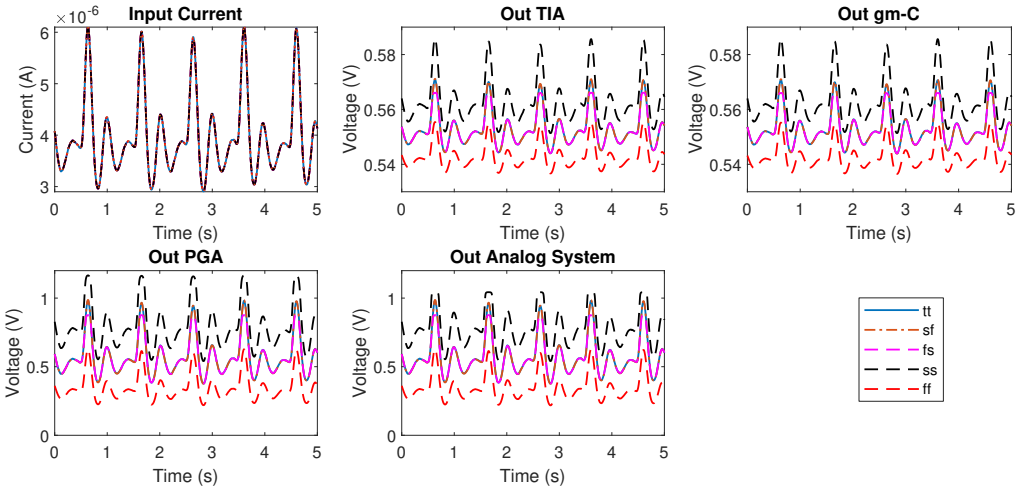

Fig. 13: Process corner variations for all blocks output of the PPG system.

TABLE VI: Performance comparison.

Design	[2]	[11]	[12]	[13]	[14]	**This work**
Process (nm)	350	180	180	55	180	**65**
Supply voltage (V)	3.3	1.0/2.5	1.2/3.3	1.8/2.8	1.2/3.3	**1.2**
Low-pass frequency (Hz)	0.95	NR[a]	NR	NR	NR	**724.43**
Power consumption (μW)	38	8.1[b]	89	72	28	**11.15-18.15**
TIA Gain (dBΩ)	139	NR	NR	NR	NR	**80**
Ambient light cancellation (μA)	10	28.2	50	200	50	**7**

[a]NR = Not reported
[b]RX system only

V. Conclusions

This paper presents an analog front-end for photoplethysmography with low power consumption and integrated offset compensation, based on a current-steering DAC and an output saturation control by means of automatic gain selection. The circuit was implemented in a 65 nm CMOS process and powered by a 1.2-V power supply. The implemented AFE has a typical DC output level of 617 mV with a voltage swing of about 700 mV_{PP} and a cut-off frequency of 724.43 Hz. The offset compensation technique can guarantee stabilization of the input DC level at 4 μA with a maximum power dissipation of 18.15 μW, making the designed circuit suitable for wearable devices where low power consumption is mandatory.

Acknowledgments

The authors would like to thank FAPERGS (process numbers 22/2551-0000841-0, 23/2551-0000844-0 and 23/2551-0002200-1) for supporting this work.

References

[1] V. R. Pamula, J. Valero-Sarmiento, L. Yan, A. Bozkurt, C. Van Hoof, N. Helleputte, R. Yazicioglu, and M. Verhelst, "A 172 μW Compressively Sampled Photoplethysmographic (PPG) Readout ASIC With Heart Rate Estimation Directly From Compressively Sampled Data," *IEEE Transactions on Biomedical Circuits and Systems*, vol. PP, 05 2017.

[2] B. Lin, M. Atef, and G. Wang, "A low-power high-sensitivity analog front-end for PPG sensor," in *2017 39th Annual International Conference of the IEEE Engineering in Medicine and Biology Society (EMBC)*, 2017, pp. 861–864.

[3] S. F. Alamouti, J. Jan, C. Yalcin, J. Ting, A. C. Arias, and R. Muller, "A Sparse Sampling Sensor Front-End IC for Low Power Continuous SpO_2 and HR Monitoring," *IEEE Transactions on Biomedical Circuits and Systems*, vol. 16, no. 6, pp. 997–1007, 2022.

[4] R. J. Baker, *CMOS: circuit design, layout, and simulation*. John Wiley & Sons, 2019.

[5] J. R. Machha Krishna and T. Laxminidhi, "Widely tunable low-pass gm-C filter for biomedical applications," *IET Circuits, Devices & Systems*, vol. 13, no. 2, pp. 239–244, 2019.

[6] I. de SB Júnior, R. C. Freire, and E. S. Venuto, "Design of a programmable gain amplifier (PGA) for Bluetooth Low Energy (BLE) in 0.13 μm CMOS," *Journal of Integrated Circuits and Systems*, vol. 15, no. 1, p. 1, 2020.

[7] A. K. Y. Wong, K.-P. Pun, Y.-T. Zhang, and K. N. Leung, "A Low-Power CMOS Front-End for Photoplethysmographic Signal Acquisition With Robust DC Photocurrent Rejection," *IEEE Transactions on Biomedical Circuits and Systems*, vol. 2, no. 4, pp. 280–288, 2008.

[8] Q. Lin, W. Sijbers, C. Avidikou, C. Van Hoof, F. Tavernier, and N. Van Helleputte, "Photoplethysmography (PPG) sensor circuit design techniques," in *2022 IEEE Custom Integrated Circuits Conference (CICC)*, 2022, pp. 01–08.

[9] Z. Ebrahimi and B. Gosselin, "Ultralow-Power Photoplethysmography (PPG) Sensors: A Methodological Review," *IEEE Sensors Journal*, vol. 23, no. 15, pp. 16 467–16 480, 2023.

[10] A. Atef, M. Atef, E. E. M. Khaled, and M. Abbas, "CMOS Transimpedance Amplifiers for Biomedical Applications: A Comparative Study," *IEEE Circuits and Systems Magazine*, vol. 20, no. 1, pp. 12–31, 2020.

[11] F. Marefat, R. Erfani, and P. Mohseni, "A 1-V 8.1-μW PPG-Recording Front-End with >92-dB DR Using Light-to-Digital Conversion with Signal-Aware DC Subtraction and Ambient Light Removal," *IEEE Solid-State Circuits Letters*, vol. PP, pp. 1–1, 12 2019.

[12] Q. Lin, J. Xu, S. Song, A. Breeschoten, M. Konijnenburg, C. Van Hoof, F. Tavernier, and N. Van Helleputte, "A 119 dB Dynamic Range Charge Counting Light-to-Digital Converter For Wearable PPG/NIRS Monitoring Applications," *IEEE Transactions on Biomedical Circuits and Systems*, vol. 14, no. 4, 2020.

[13] Y.-S. Shu, Z.-X. Chen, Y.-H. Lin, S.-H. Wu, W.-H. Huang, A. Y.-C. Chiou, C.-Y. Huang, H.-Y. Hsieh, F.-W. Liao, T.-F. Zou, and P. Chen, "A 4.5 mm^2 Multimodal Biosensing SoC for PPG, ECG, BIOZ and GSR Acquisition in Consumer Wearable Devices," in *2020 IEEE International Solid-State Circuits Conference - (ISSCC)*, 2020, pp. 400–402.

[14] Q. Lin, S. Song, R. V. Wegberg, M. Konijnenburg, D. Biswas, C. V. Hoof, F. Tavernier, and N. V. Helleputte, "A 28 μW 134 dB DR 2nd-Order Noise-Shaping Slope Light-to-Digital Converter for Chest PPG Monitoring," in *2021 IEEE International Solid-State Circuits Conference (ISSCC)*, vol. 64, 2021, pp. 390–392.